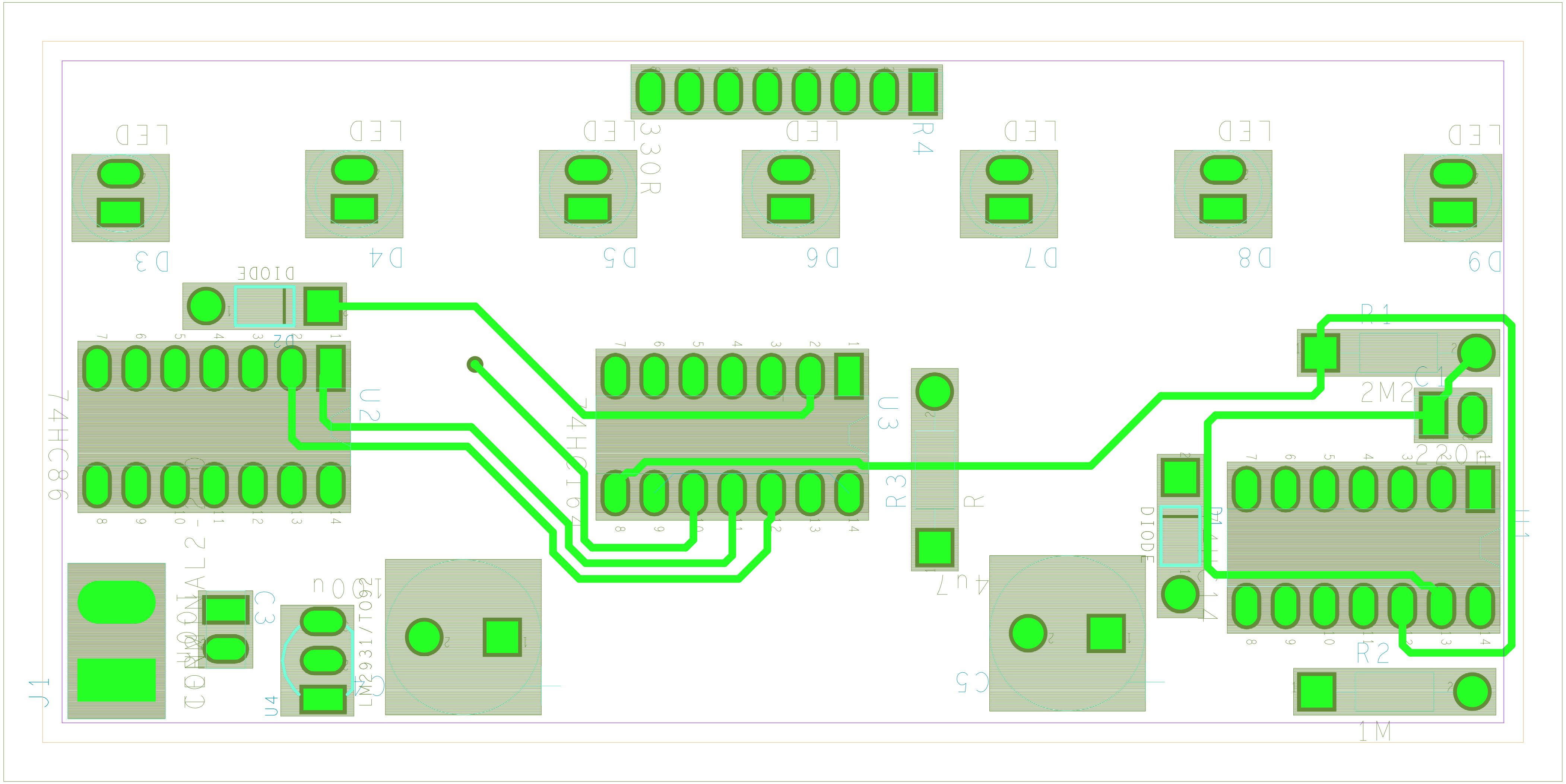
LED
LED
LED
LED
LED
LED
LED
D3
D4
D5
D6
D7
D8
D9
R4
330R
DIODE
D2
U2
74HC86
U3
74HC164
R3
R
4u7
C5
R1
2M2
C1
220n
D1
DIODE
U1
R2
1M
J1
TERMINAL2
C3
100n
U4
LM2931/TO92